Automatización Eléctrica
Especialistas en Automatización

At the end of this document you will find links to products related to this catalog. You can go directly to our shop by clicking HERE

JSM A88 2000m

General Information

Extended Product Type:	JSM A88 2000m
Product ID:	2TLA040037R3300
EAN:	7350024462623
Catalog Description:	JSM A88 Cable duct 88x68 L=2m
Long Description:	Cable duct 88x68mm without holes. Natural anodized Aluminium. Length 2000mm

Categories

Products » Low Voltage Products and Systems » Control Products » Safety Products » Fencing Systems

Ordering

EAN:	7350024462623
Minimum Order Quantity:	1 piece
Customs Tariff Number:	76109090

Dimensions

Product Net Width:	2.0 m
Product Net Height:	0.068 m
Product Net Depth:	0.088 m
Product Net Weight:	3.688 kg

Container Information

Package Level 1 Units:	1 piece
Package Level 1 Gross Weight:	3.688 kg

Additional Information

Product Main Type:	Quick-Guard
Product Name:	Safety Fencing Systems Quick Guard

Certificates and Declarations (Document Number)

Data Sheet, Technical Information:	2TLC172001C0202_chapter13
Declaration of Conformity - CE:	NoDecNee

Classifications

ETIM 4:	EC000059 - Installation duct
ETIM 5:	EC000059 - Installation duct
Object Classification Code:	U

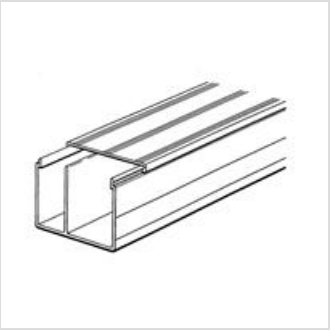

Automatización Eléctrica
Especialistas en Automatización

Below is a list of articles with direct links to our shop Electric Automation Network where you can see:

- Quote per purchase volume in real time.
- Online documentation and datasheets of all products.
- Estimated delivery time enquiry in real time.
- Logistics systems for the shipment of materials almost anywhere in the world.
- Purchasing management, order record and tracking of shipments.

To access the product, click on the green button.

Product	Code	Reference	Product link
JSM A88 Cable duct 88x68 L=2m	2TLA040037R3300	JSM A88	Buy on EAN